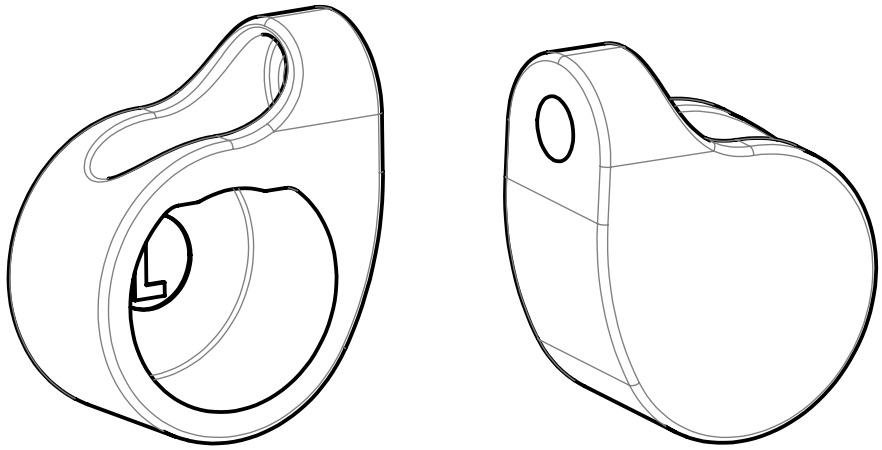

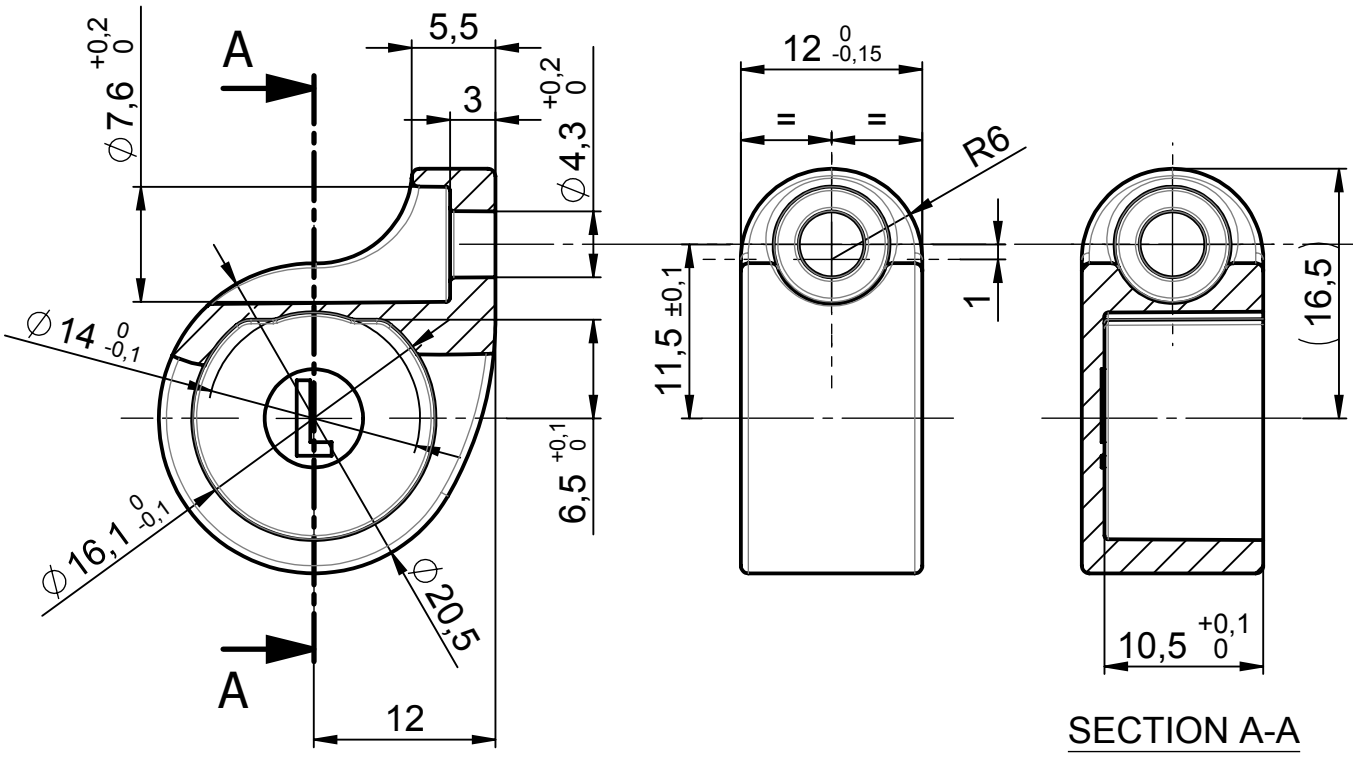

Notes:

- Dimensions not indicated according to 3d file.
- See left margin for additional info.

TOLERANCES TO APPLY IF NOT SPECIFIED (according to DIN 7168 medium level)

dimension	x≤6	6<x≤30	30<x≤100	100<x≤300	300<x≤1.000	1.000<x
tolerance	±0,1	±0,2	±0,3	±0,5	±0,8	±1,2

linear dimensions (mm)

	β≤10º	10º<β≤50º	50º<β≤120º	120º<β
angular dimensions	±1º	±30'	±20'	±10'

	screw holes	centering holes
measured between centers	±0,2	±0,02

SURFACE QUALITY

GENERAL CONSIDERATIONS

Smooth sharp edges / Matar aristas vivas

Units: mm / Unidades: mm

Format: DIN A4 / Formato: DIN A4

This document is copyrighted by COMSAN / Este documento es propiedad intelectual de COMSAN

comsan

	Name	Date	Modification	Name	Date
Drawing by	T.MURILLO	2015-05-05	New part	T.MURILLO	2015-05-05
Checked by	X.ALÉS	2015-05-05			

Name part / Nombre de pieza: ELEMENTO GUIA CR L Ø16x11,5x12
SC GUIDE ELEMENT L Ø16x11,5x12

Material / Material: AISI 316L

Projection / Proyección

Treatments and/or finished / Tratamientos y/o acabado: Polished

Reference part / Referencia de pieza: C3102500F0

Sheet nº / Hoja nº	Scale / Escala	Weight (g) / Peso (g)	Volume (cm³) / Volumen (cm³)	Drawing code / Código de plano	Version / Versión
1/1	2:1	-	-	CDRW-3102500xx	a